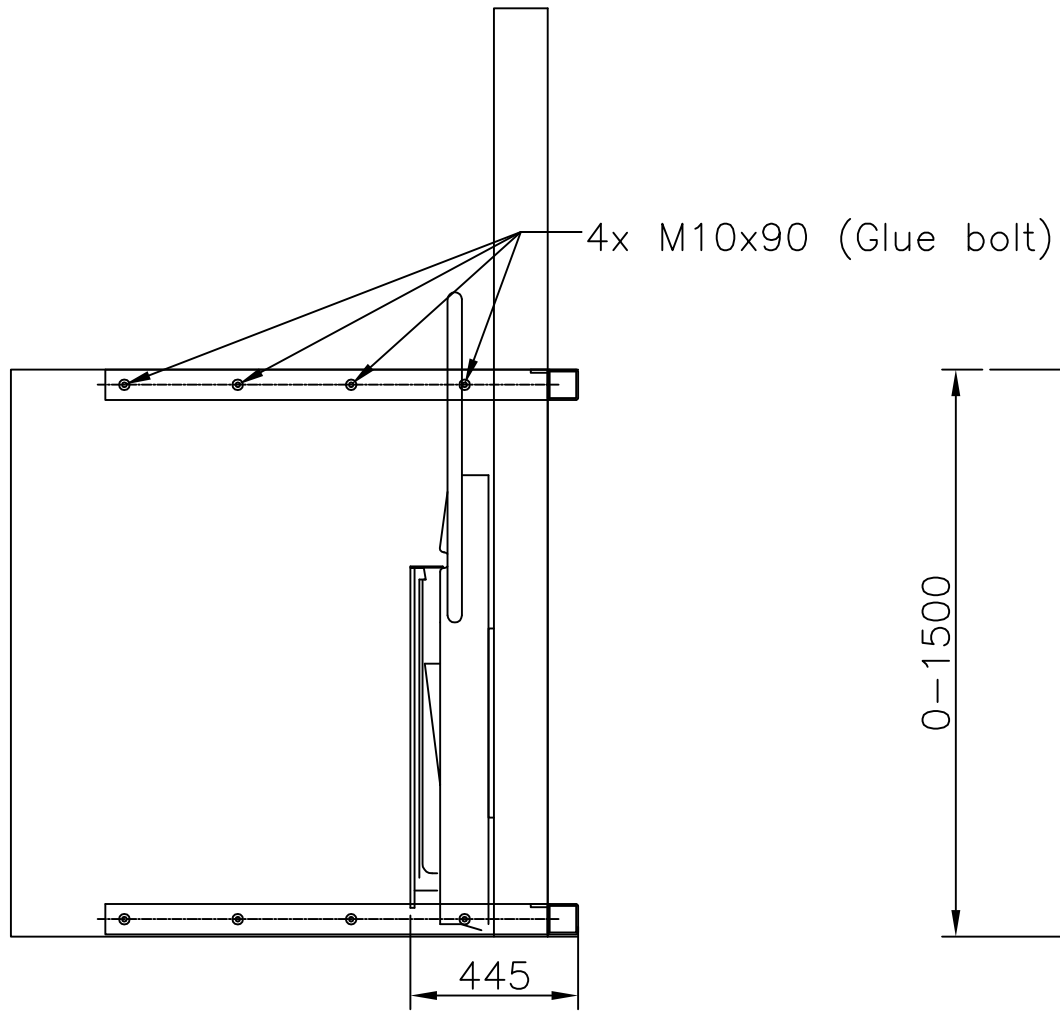

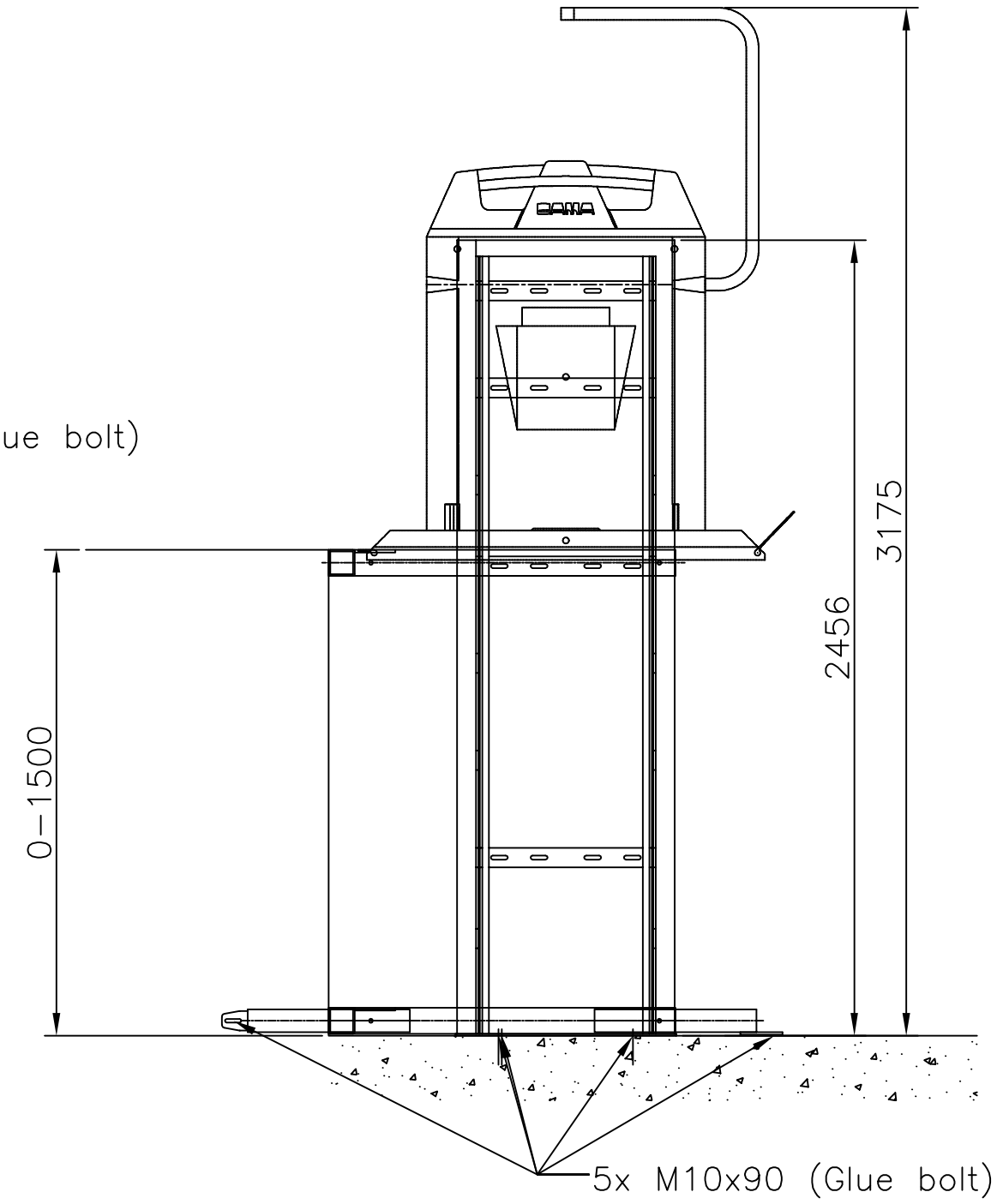

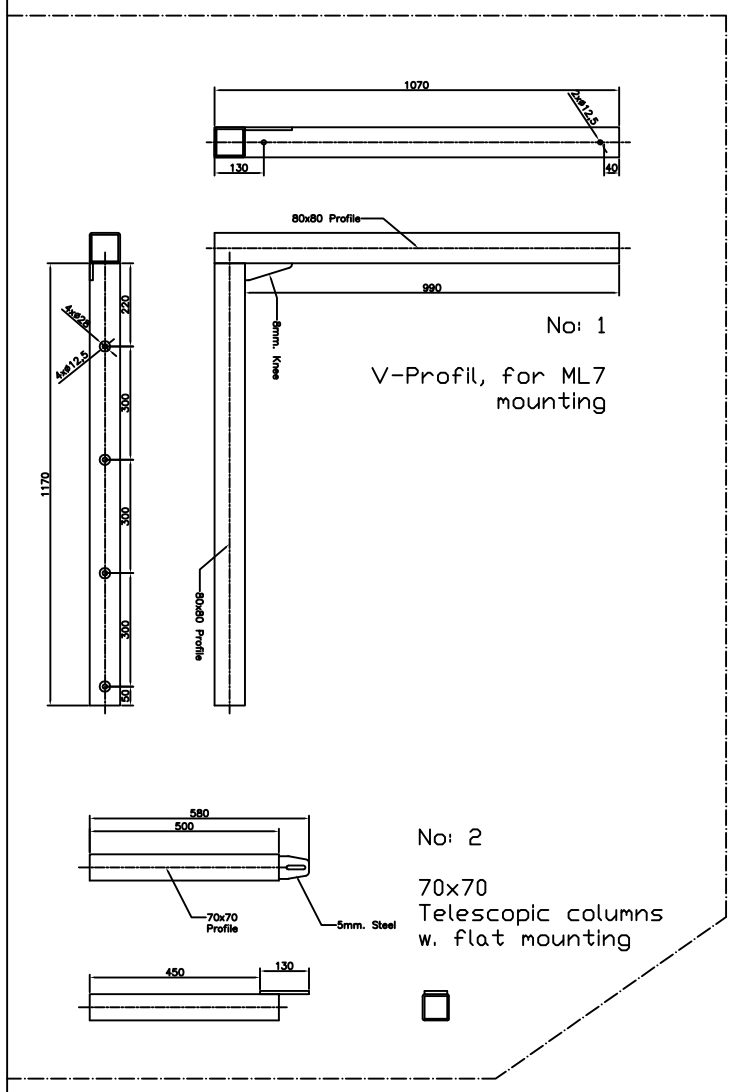

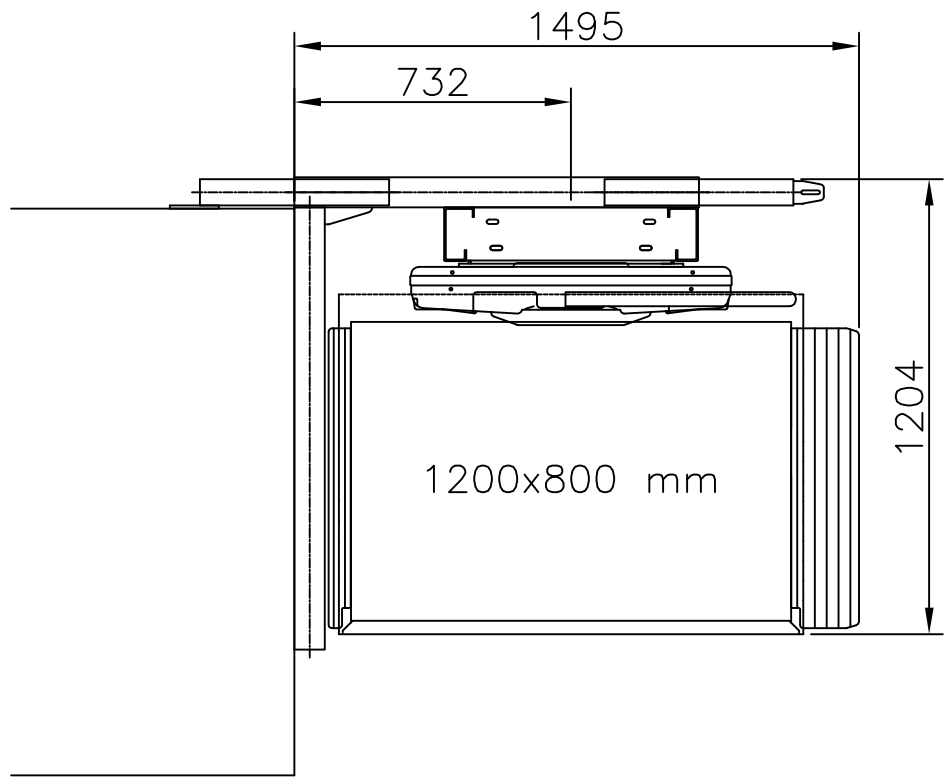

NOTE! Light min. 50 lux
at any landing point

Power outlet available
for inspection.

CAMA aps.ELLEHAMMERVEJ 6, 9900 FREDERIKSHAVN.
Telefon. +45 98 43 01 22 – Telefax. +45 98 42 08 62

STAIRLIFT INSTALLATION FOR: Cama Lift Aps.

TYPE: ML7S

Draw by: ABV

SCALE: 1:20 (A3)

DATE: 25.01.2016

YOUR REF.: V–Profil – 01

SKETCH NO.: ML7S–EX07

SKETCH–NOT FOR APPROVAL

SHOULD THIS INQUIRY BECOME AN ORDRE PLEASE WRITE THE SKETCH NUMBER ON THE ORDRE.

SPECIAL REQUIREMENTS:

Right

–

2x V–Profil, for ML7S

2x Telescopic columns, flat